IS222: Database Management Systems
School of Information Technology, Engineering, Mathematics, and Physics

Final Examination
Semester 1 2022

F2F/Blended/Online Mode

Duration of Exam: 3 hours + 10 minutes

Reading Time: 10 minutes

Writing Time: 3 hours

Total marks: 100

Instructions:

1. *This exam has 11 questions and ALL are compulsory.*
2. *There are 14 pages in this paper including this cover page.*
3. *Show all necessary working. Partial marks will be awarded for partially correct answers.*
4. *Only non-programmable calculators are allowed.*
5. *This exam is worth 40 % of your overall mark.*
6. *The minimum passing mark is 40/100.*

Section A (Questions 1-5) - Short and Long Answer Questions (20 Marks)

1. Explain the notion of business rules in the database? (2 mark)

A business rule is an unambiguous description of business processes.

Or

A business rule is a statement that imposes some form of constraint on a specific aspect of the database, such as the elements within a field specification for a particular field or the characteristics of a given relationship.

Or

A business rule is a brief, precise, and unambiguous description of a policy, procedure, or principle.

2. What strategies can the database designer use to identify the business rules? (2 marks)

Interview stakeholders, and look at existing documentation and existing system.

3. Using Figure 1 as your guide,identify Realtion types and Business Rules.
   The DealCo relational diagram shows the initial entities and attributes for the DealCo stores, located in two regions of the country.

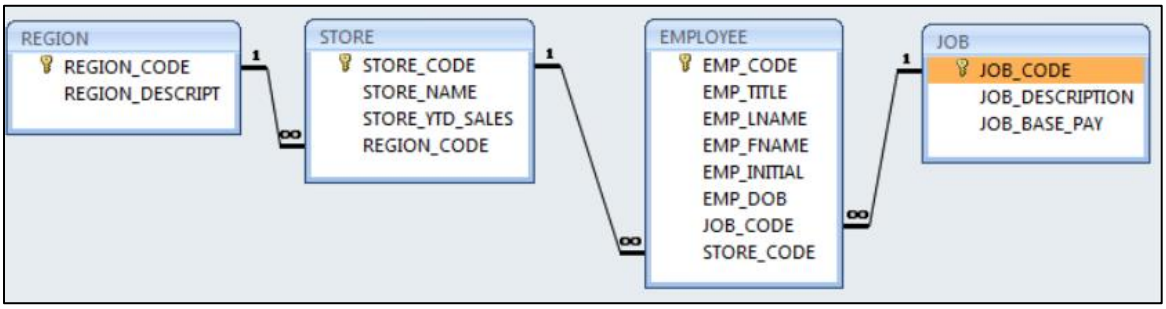

Figure 1: The DealCo relational diagram.

Identify each relationship type and write all possible business rules. (9 marks)

One region can be the location for many stores. Each store is located in only one region.

- Therefore, the relationship between REGION and STORE is 1:M.

Each store employs one or more employees. Each employee is employed by one store. (In this case, we are assuming that the business rule specifies that an employee cannot work in more than one store at a time.)

- Therefore, the relationship between STORE and EMPLOYEE is 1:M.

A job – such as an accountant or sales representative -- can be assigned to many employees. (For example, one would reasonably assume that a store can have more than one sales representative. Therefore, the job title "Sales Representative" can be assigned to more than one employee at a time.) Each employee can have only one job assignment. (In this case, we are assuming that the business rule specifies that an employee cannot have more than one job assignment at a time.)

- Therefore, the relationship between JOB and EMPLOYEE is 1:M.

Note for the marker: 2 marks for the correct identification of the business rule and 1 mark each for the justification of the relationships.

4. Identify and discuss the file structure in Figure 2: P1.1 below, which has major data redundancy issues. (3 marks)

PROJ_NUM	PROJ_NAME	EMP_NUM	EMP_NAME	JOB_CODE	JOB_CHG_HOUR	PROJ_HOURS	EMP_PHONE
1	Hurricane	101	John D. Newson	EE	85.00	13.3	653-234-3245
1	Hurricane	105	David F. Schwann	CT	60.00	16.2	653-234-1123
1	Hurricane	110	Anne R. Ramoras	CT	60.00	14.3	615-233-5568
2	Coast	101	John D. Newson	EE	85.00	19.8	653-234-3254
2	Coast	108	June H. Sattlemeir	EE	85.00	17.5	905-554-7812
3	Satellite	110	Anne R. Ramoras	CT	62.00	11.6	615-233-5568
3	Satellite	105	David F. Schwann	CT	26.00	23.4	653-234-1123
3	Satelite	123	Mary D. Chen	EE	85.00	19.1	615-233-5432
3	Satellite	112	Allecia R. Smith	BE	85.00	20.7	615-678-6879

Figure 2: P1.1

The file structure is not that great. It has multiple anomalies. Under JOB_CODE=EE changes the JOB_CHG_HOUR, it would need to be changed twice. This will cause problems in the future if any data is changed. Overall, this whole File Structure has problems and needs to be changed.

a) Looking at the EMP_NAME and EMP_PHONE contents in Figure P1.1, what change(s) would you recommend? (1.5 marks)

A change I would make is organizing them. By them, I mean by the names. So having it under EMP_FNAME and EMP_LNAME. This way it would be good and easier to find the data from the employees. I also think the EMP_PHONE can be more organized. This saying, having area code differences from the actual phone digits can be more organized.

b) Create the basic Crow's Foot ERD for DealCo. (2.5 marks)

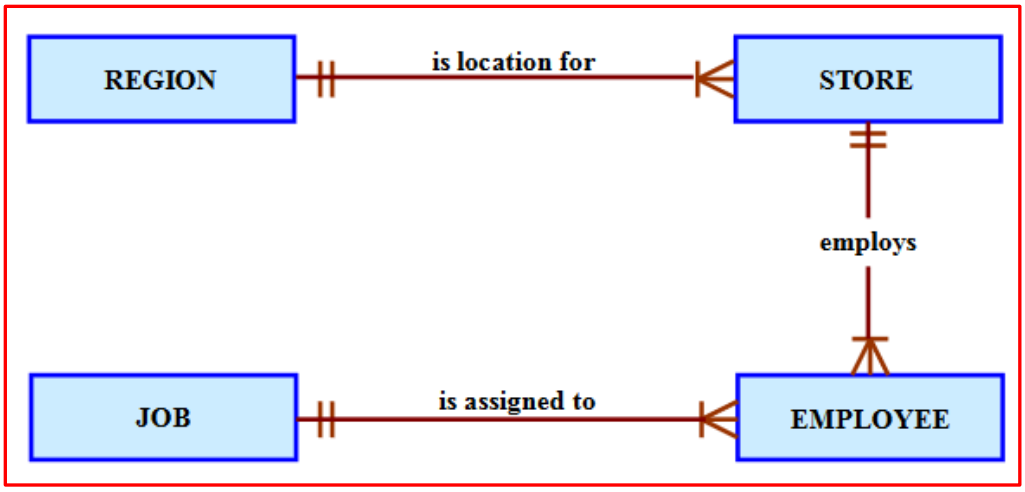

Section B (Questions 5-8) – Case Study: Constructing Data Model for RDMBS (50 Marks)

Question 5 **The Dementia Patient Appointment System**

This is a case of a patient with a history of dementia who presented with agitation. This case demonstrates that depression in a patient with dementia may not present with typical symptoms of depression as seen in the general population. Treatments may include behavioral and caregiver interventions in addition to medication. This patient is a 77-year-old man with a past medical history significant for dementia, hyperlipidemia, coronary artery disease (CAD), s/p coronary artery bypass graft (CABG), and aortic valve replacement (AVR) who was referred to the Memory Clinic for agitation.

According to the patient's family member, he started having memory problems in 2002, which worsened significantly after his CABG and AVR in 2004. At the time he presented to the clinic, he had functional deficits in the following instrumental activities of daily living (IADLs) – handling finances, driving, cooking, and shopping. This 77-year-old patient has made it a daily routine to visit the hospital. However, he still follows the appointment strategies at the Hospital to consult his usual specialist. Upon certain parleys, the administrator advised the process for appointments to the member accompanying the patient.

The administrator eventually explained that a doctor can be scheduled for many appointments, but may not have any scheduled at all. Each appointment is scheduled with exactly 1 doctor. A patient can schedule 1 or more appointments. One appointment is scheduled with exactly 1 patient. An appointment must generate exactly 1 bill, a bill is generated by only 1 appointment. One payment is applied to exactly 1 bill, and 1 bill can be paid off over time by several payments. A bill can be outstanding,

having nothing yet paid on it at all. One patient can make many payments, but a single payment is made by only 1 patient. Some patients are insured by an insurance company. If they are insured, they can only carry insurance with one company. An insurance company can have many patients carry their policies. For patients that carry insurance, the insurance company will make payments, each single payment is made by exactly 1 insurance company.

Given the above information, construct a Crow's foot ERD for the scenario. Write all appropriate connectivities and cardinalities in the ERD. Ensure to insert the appropriate attributes following the case. (15 marks)

Given the above information, the following ERD can be drawn:

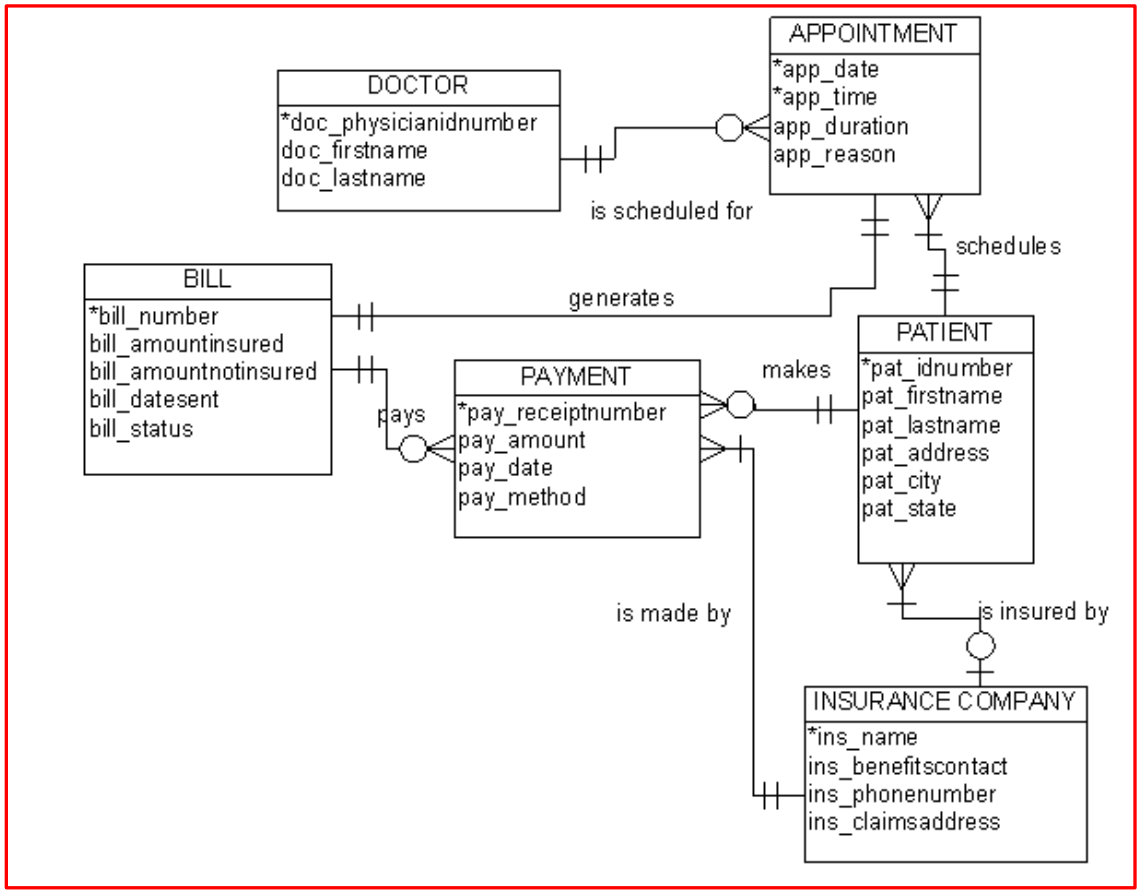

Markers Note: Please note award full marks if the student has shown and inserted the attribute, connectivity, cardinality, and strength of the relationship.

Question 6

Given the E-R diagram (ERD) shown below, provide your responses. Write the explicit cardinalities (i.e., UML style) indicated by the crow's foot notation used in the ERD. (10 marks)

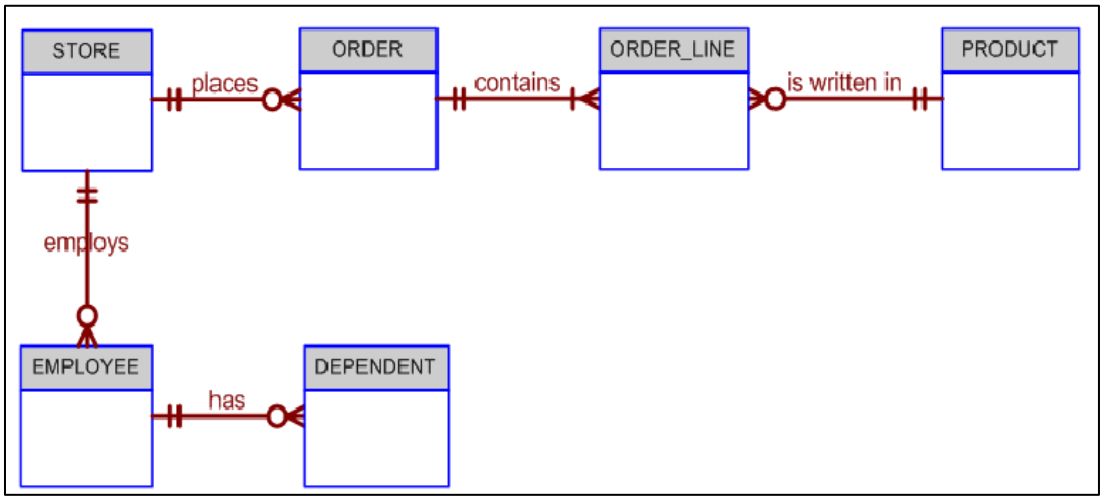

Figure 3: An Entity Relationship Diagram (ERD) for a Store.

Given the above information, the following possible solutions can be drawn:

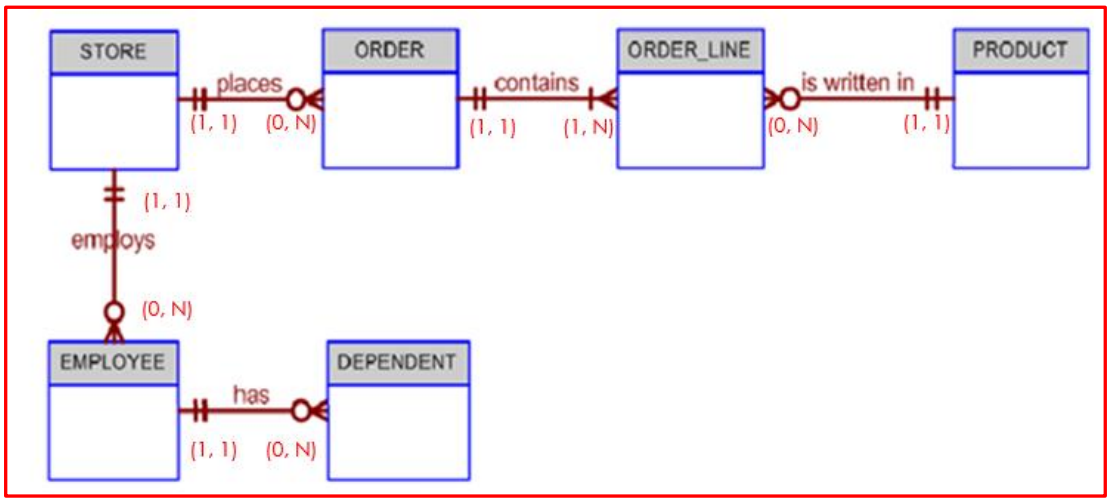

Question 7

Normalisation

The role of the Fiji government pharmacy is to import medicine into the country and distribute it to major hospitals around the country. Table 1 shows the records that are kept by the government pharmacy when it distributes the medicine to the major hospitals around Fiji. You are required to design a relational database to store the data shown in the two tables. The following questions will help you achieve this outcome.

Table 1: To be used to answer the following questions.

Attribute Name	Sample Value	Sample Value	Sample Value	Sample Value	Sample Value	Sample Value	Sample Value
Hospital_Num	H101	H101	H101	H101	H102	H102	H102
Hospital_Name	Suva Private	Suva Private	Suva Private	Suva Private	CWM	CWM	CWM
Med_Num	M1006	M1006	M1007	M1008	M1005	M1009	M1010
Med_Name	Throat Coat	Throat Coat	SinuFix	Panadol	Tylenol	Frova	Axert
MedType_ID	LQD	LQD	CAP	CAP	TBL	TBL	TBL
MedType_Desc	Fuild	Fuild	Capsules	Capsules	Tablets	Tablets	Tablets
Dispatch_Date	40182	40240	40190	40262	40212	40254	40240
Dispatch_Qty	10	10	50	50	100	10	20
Unit_ID	MU3	MU3	MU2	MU2	MU1	MU1	MU1
Unit_Desc	Bottles	Bottles	Boxes	Boxes	Cards	Cards	Cards

a) Draw the dependency diagram showing all types of dependencies that are functional, partial, and transitive. (8 marks)

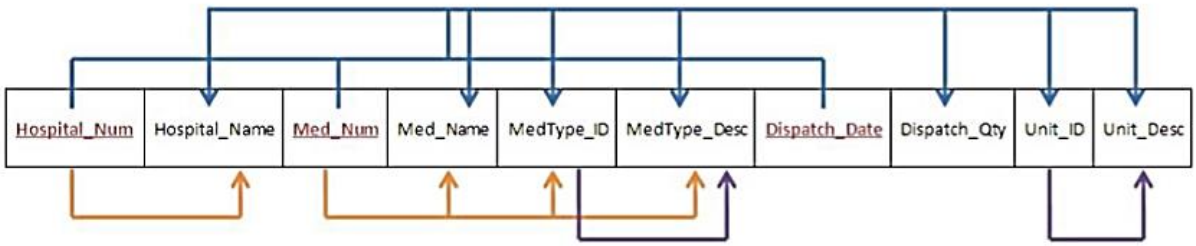

b) Using the table structures you created in Question 1, convert your table structure to 3NF, and draw the new dependency diagram. (7 marks)

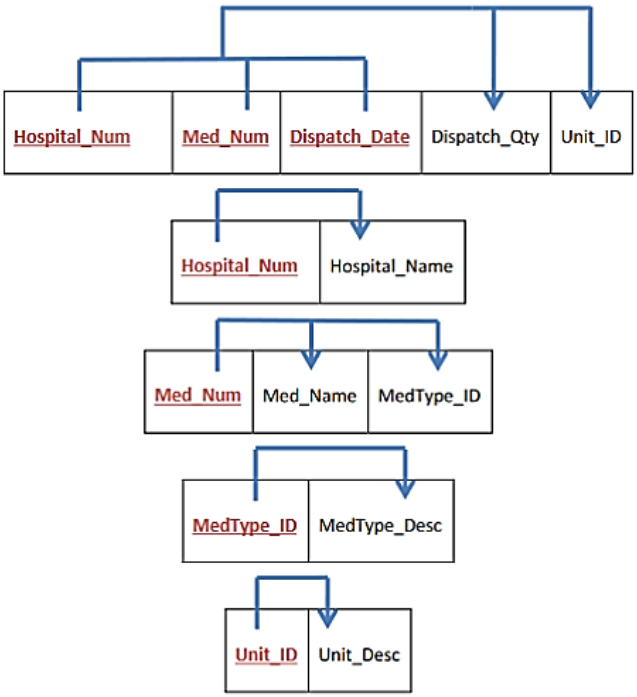

Question 8

Suppose you are given the following requirements for a simple database for the Fiji National Hockey League (FNHL):

The FNHL has many teams,

• each team has a name, a city, a coach, a captain, and a set of players,

• each player belongs to only one team,

• each player has a name, a position (such as left-wing or goalie), a skill level, and a set

of injury records,

• a team captain is also a player,

• a game is played between two teams (referred to as host_team and guest_team) and has a date (such as May 25th, 2022) and a score (such as 4 to 2).

Construct a clean and concise ER diagram for the FNHL database using the Chen notation. List your assumptions and indicate the cardinality mappings as well as any role indicators in your ER diagram. (10 marks)

Note for the Marker: Here is one sample solution. Note that other diagrams are possible depending on assumptions. Please mark based on your discretion depending on the solution potrayed. However, use the below solution as your reference.

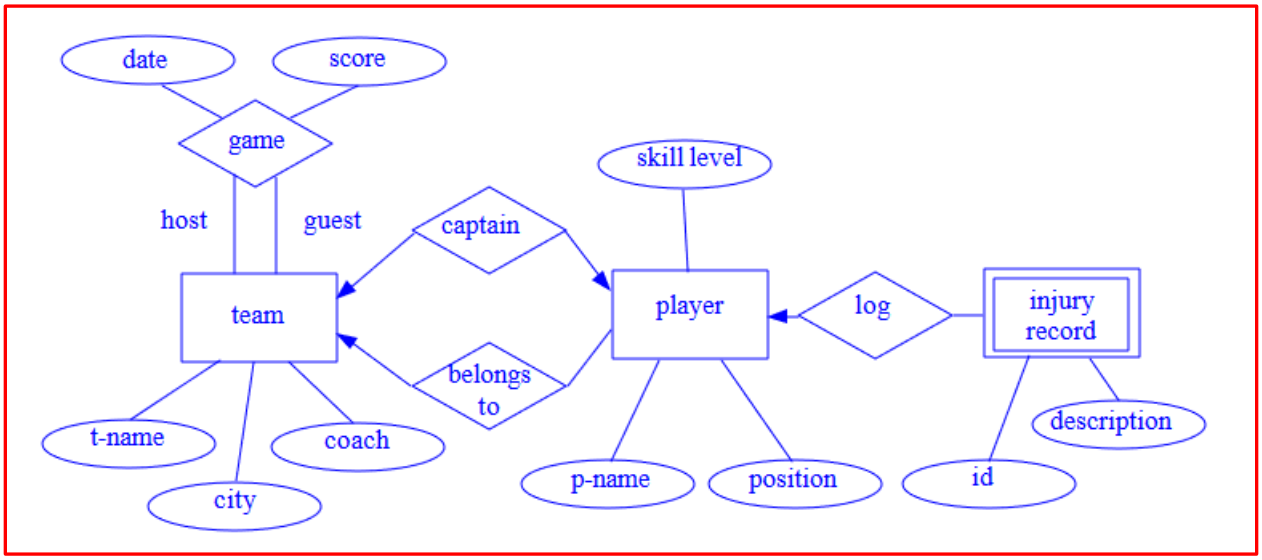

Section C (Questions 9-11) – Structured Query Language (SQL) (30 Marks)

Question 9

Given two tables created and populated as follows:

```
CREATE TABLE dbo.envelope(id int, user_id int);
CREATE TABLE dbo.docs(idnum int, pageseq int, doctext varchar(100));

INSERT INTO dbo.envelope VALUES
  (1,1),
  (2,2),
  (3,3);

INSERT INTO dbo.docs(idnum,pageseq) VALUES
  (1,5),
  (2,6),
  (null,0);
```

Figure 4: Portrays table dbo.envelope and dbo.docs.

Query:

```
UPDATE docs SET doctext=pageseq FROM docs INNER JOIN envelope ON
envelope.id=docs.idnum
WHERE EXISTS (
  SELECT 1 FROM dbo.docs
  WHERE id=envelope.id
);
```

Using the information given above in Question 10 identify and draw the possible results obtained from the above query. (5 marks)

```
idnum   pageseq   doctext
1       5         5
2       6         6
NULL    0         NULL
```

Question 10

Consider the below two tables (Tables 2 & 3) for reference while trying to solve the SQL queries from parts (a to d).

Table 2: The Employee Details.

EmpId	FullName	ManagerId	DateOfJoining	City
121	John Snow	321	01/31/2014	Toronto
321	Walter White	986	01/30/2015	California
421	Kuldeep Rana	876	27/11/2016	New Delhi

Table 3: The Employee Salary.

EmpId	Project	Salary	Variable
121	P1	8000	500
321	P2	10000	1000
421	P1	12000	0

a) Write an SQL query to fetch the EmpId and FullName of all the employees working under Manager with id – '986'. (5 marks)

```
SELECT  EmpId, FullName
FROM EmployeeDetails
WHERE ManagerId = 986;
```

b) Write an SQL query to find the maximum, minimum, and average salary of the employees. (5 marks)

```
SELECT Max(Salary),
Min(Salary),
AVG(Salary)
FROM EmployeeSalary;
```

c) Write an SQL query to find the employee id whose salary lies in the range of 9000 and 15000. (5 marks)

```
SELECT EmpId, Salary
FROM EmployeeSalary
WHERE Salary BETWEEN 9000 AND 15000;
```

d) Write an SQL query to fetch all those employees who work on Projects other than P1.
*Hint: Here, we can use the NOT operator to fetch the rows which do not satisfy the given condition. (5 marks)

```
SELECT EmpId
FROM EmployeeSalary
WHERE NOT Project='P1';

Or

SELECT EmpId
FROM EmployeeSalary
WHERE Project <> 'P1';
```

Question 11

Write an SQL query to join 3 tables (Table: Employee, Department, and Gender).

*Hint: To fetch EmpName, DeptName, and Gender information of all the employees will join the 3 tables. (10 marks)

EmpNo	EmpName	DeptId	GenderId
1886	**John Snow**	**101**	**1**
1889	**Amara Giselle**	**102**	**2**
1890	**Richie Tung**	**102**	**1**

Table – Employees

DeptId	DeptName
101	HR
102	IT

Table – Department

GenderId	Gender
01	Male
02	Female

Table – Gender

Figure 5: Shows Three Tables.

```
SELECT EmpName, DeptName, Gender
FROM Employees
JOIN Departement ON Employees.DeptId=Department.DeptId
JOIN Genders ON Employees.GenderId=Genders.GenderID;
```

THE END